REV.	DESCRIPTION	ECN. CORE	DATE

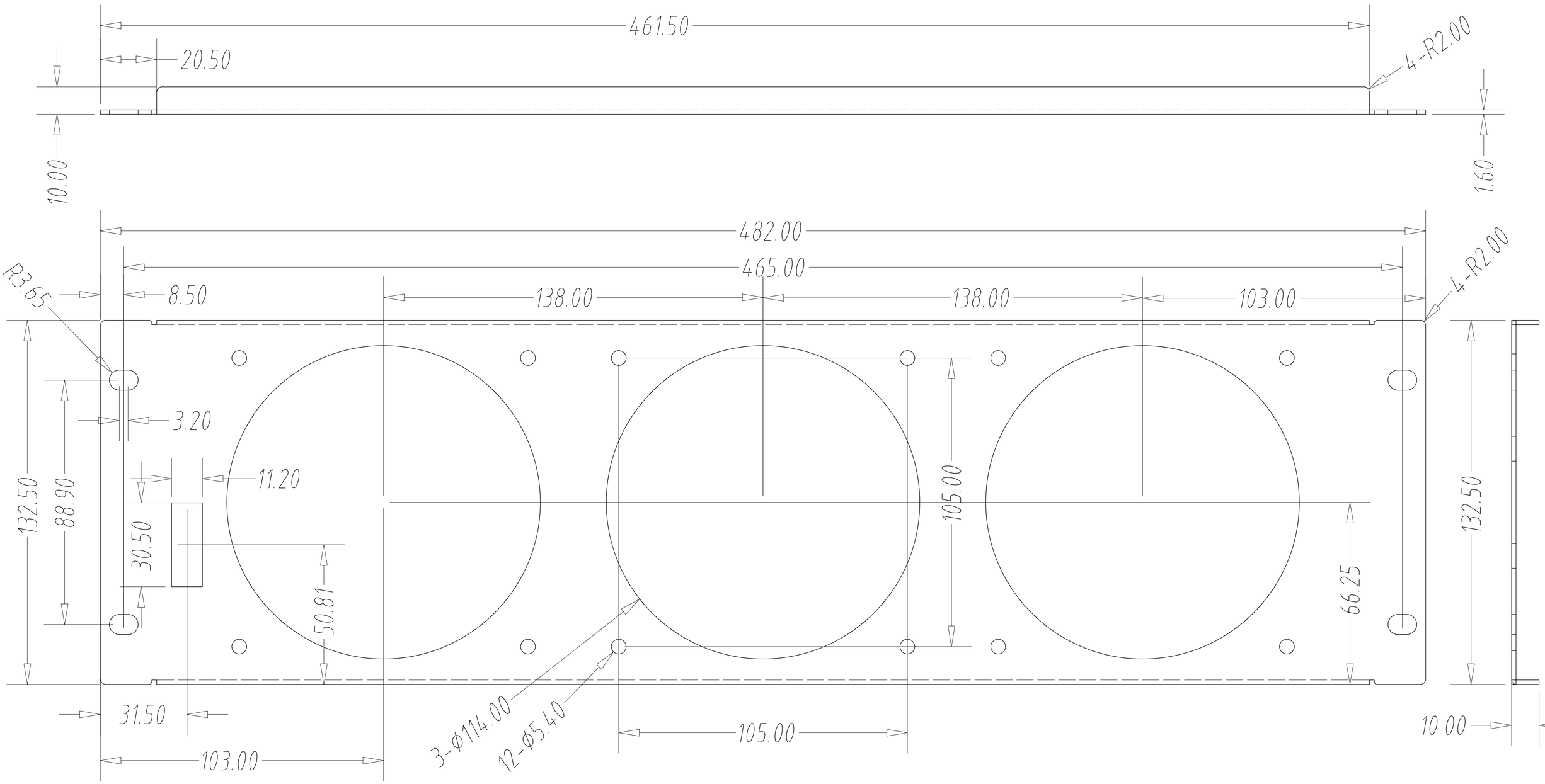

MEAN WELL

NOTE:

MATERIAL: SPCC T=1.6mm			DWG NAME: 3U风扇板
FINISH: 細織紋烤漆 PANTONE 4U △E<2.5			DWG. NO: 系統電源
TOL. ( ) × ±0.35 ×.× ±0.25 ×.×× ±0.15	ANGLES ±0.5° (✓) UP to 100:±0.2mm 100 to 200:±0.3mm 200 to 300:±0.4mm 300 to 400:±0.5mm	DATE: 2025-10-31	P/NO: PGG7RA9BM03U-C
		SCALE: 1 : 1 / UNIT: mm	
		SHEET: 1 OF 1 / REV. R0	