REV.	DESCRIPTION	ECN CORE	DATE

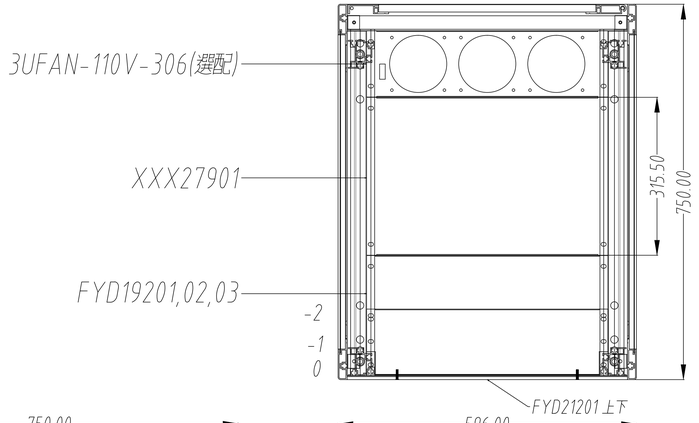

注意事項：

1.SA26-3PPUMBSH 3"煞車輪 X 2顆

SA26-3PPUMASH 3"活動輪 X 2顆

RA-FLOORSTAND-1 X 4

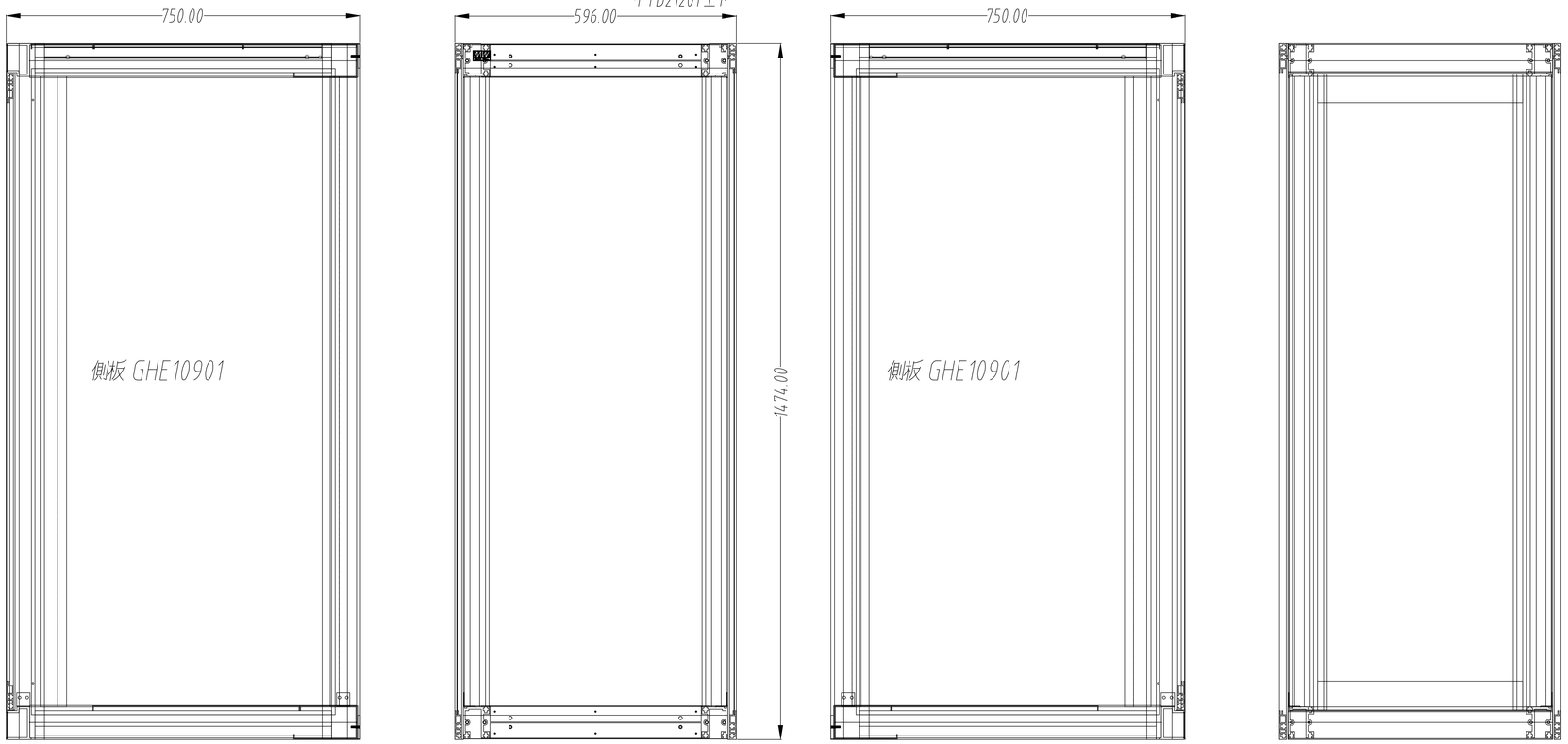

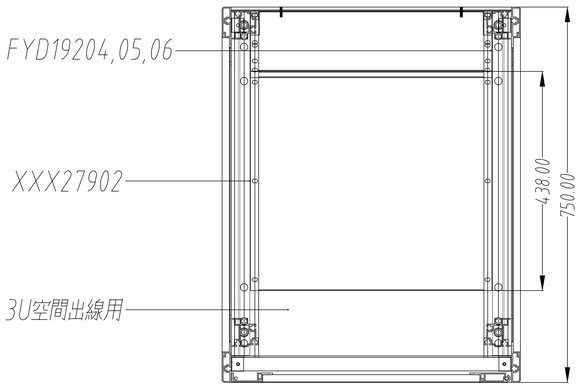

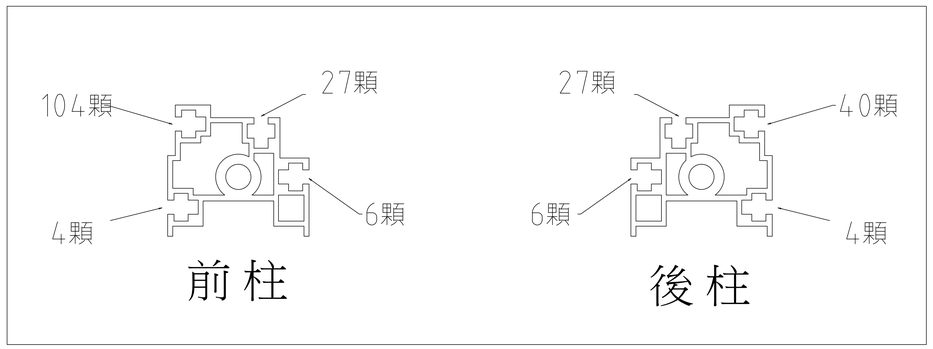

MEAN WELL	MATERIAL:		DWG NAME: RA-30U-750機櫃
	FINISH: 粉體烤漆 -306		DWG. NO: 系統電源
NOTE:	TOL. ANGLES ±0.5° / (.xx) UP to 100 ±0.2mm; 100 to 200 ±0.3mm; 200 to 300 ±0.4mm; 300 to 400 ±0.5mm / .x ±0.35 / .xx ±0.25 / .xxx ±0.15	DATE: 2023-04-25	P/NO: P××2RA-30-750
		SCALE: 1 : 1 / UNIT: mm	
		SHEET: 1 OF 1 / R0	