REV.	DESCRIPTION	ECN. CORE	DATE

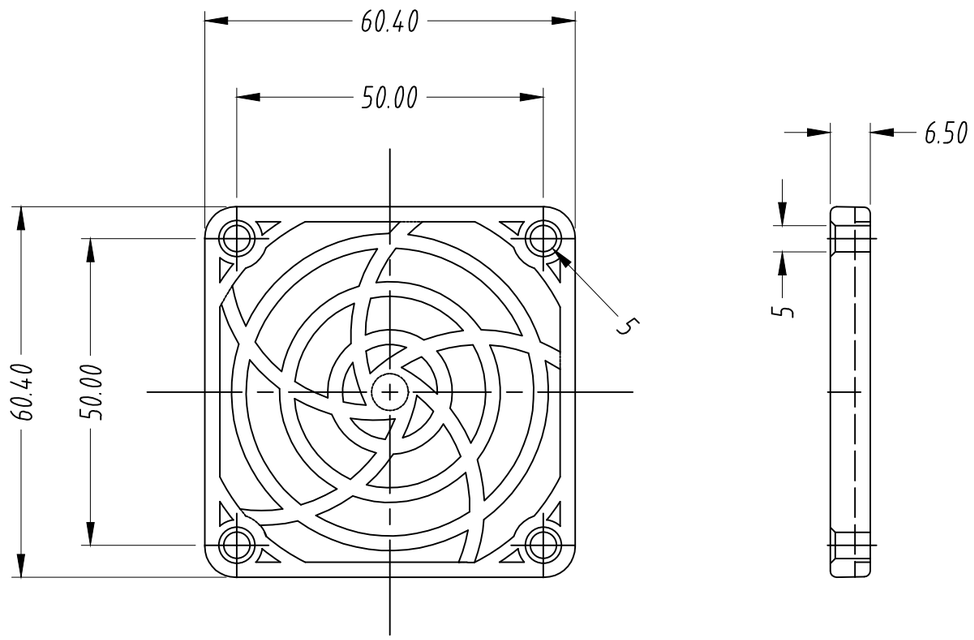

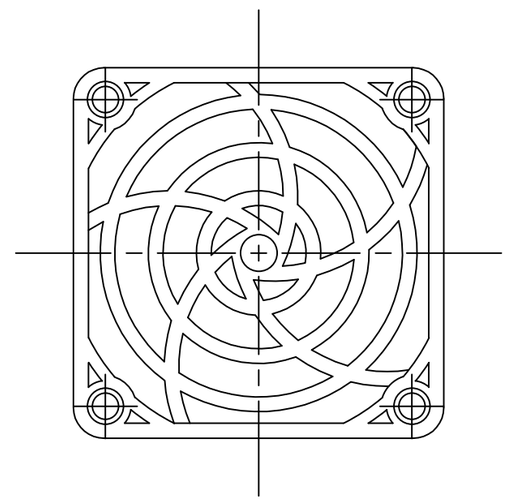

六公分單片保護網

MEAN WELL

NOTE: TOL.:±1

MATERIAL: PA707 Black			DWG NAME: Plastic Fan Guard
FINISH:			DWG. NO: PB-06
TOL. ( ) ANGLES ±0.5° (✓)	DATE: 2026-05-28		P/NO: PEE6FGP-6
×. ±0.35 ×.× ±0.25 ×.×× ±0.15 — UP to 100:±0.2mm, 100 to 200:±0.3mm, 200 to 300:±0.4mm, 300 to 400:±0.5mm	SCALE: 1 : 1	UNIT: mm	
	SHEET: 1 OF 1	REV. R0	