REV.	DESCRIPTION	ECN. CORE	DATE

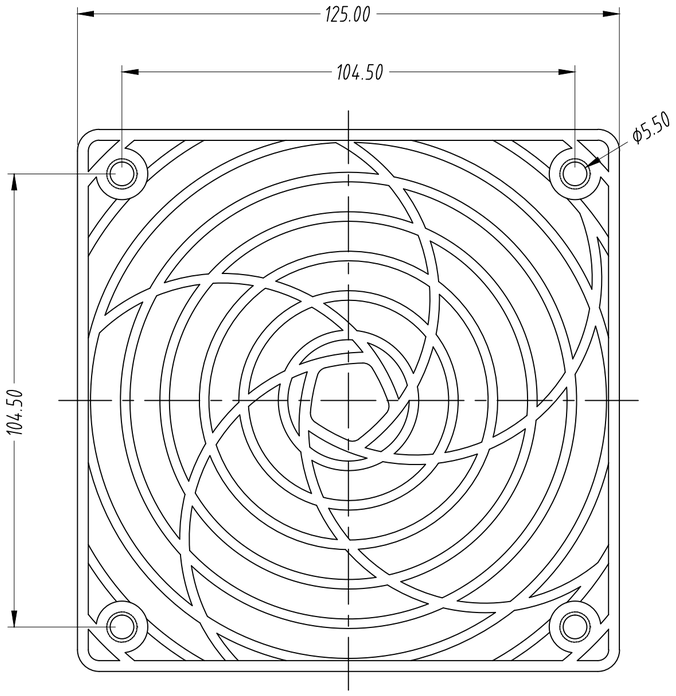

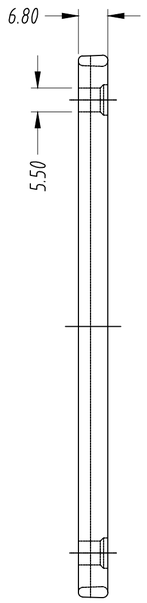

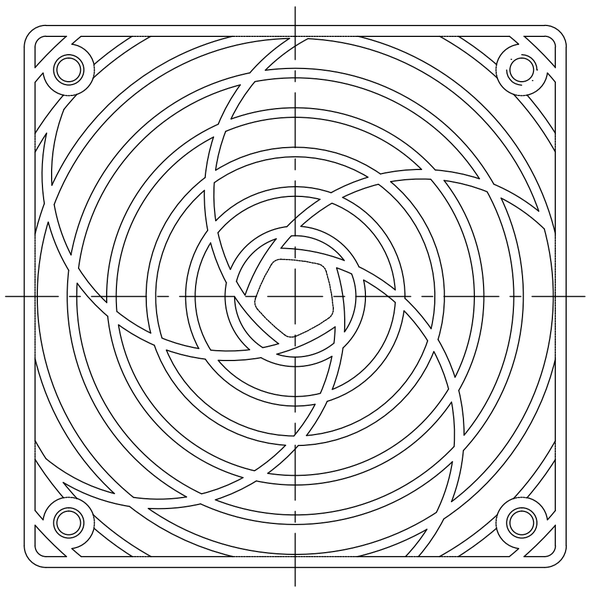

12公分單片保護網

MEAN WELL	MATERIAL: PA707 Black		DWG NAME: Plastic Fan Guard
	FINISH:		DWG. NO: PB-12
NOTE: TOL.:±1	TOL. ANGLES ±0.5° ( ) (✓) x. ±0.35 UP to 100:±0.2mm x.x ±0.25 100 to 200:±0.3mm x.xx ±0.15 200 to 300:±0.4mm 300 to 400:±0.5mm	DATE: 2026-05-28	P/NO: PEE6FGP-12
		SCALE: 1 : 1 / UNIT: mm	
		SHEET: 1 OF 1 / REV. R0	