REV.	DESCRIPTION	ECN. CORE	DATE

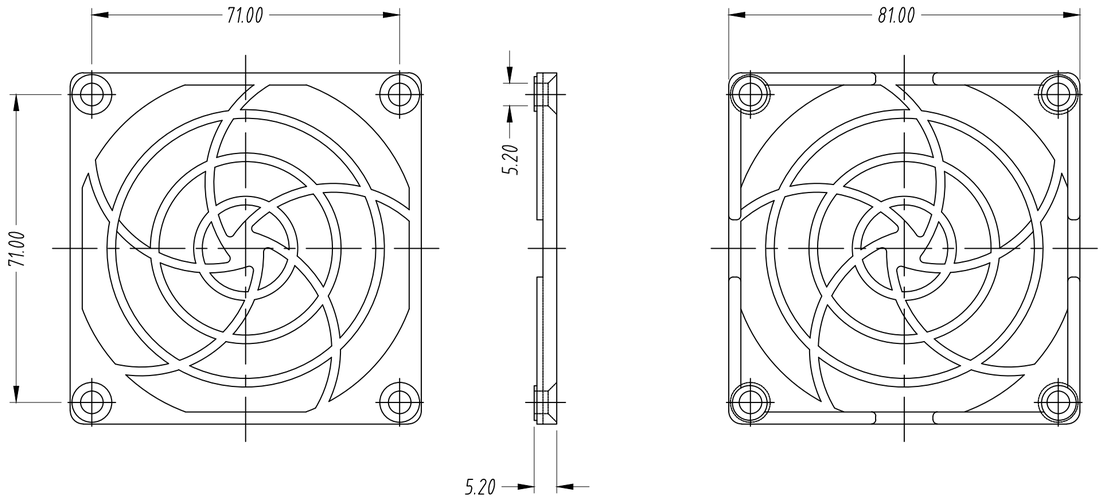

八公分三合一保護網下蓋

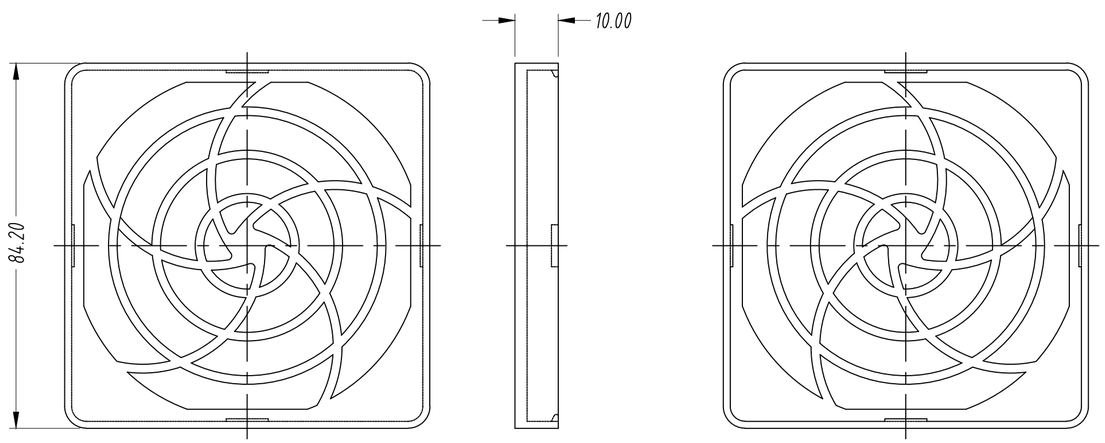

八公分三合一保護網上蓋

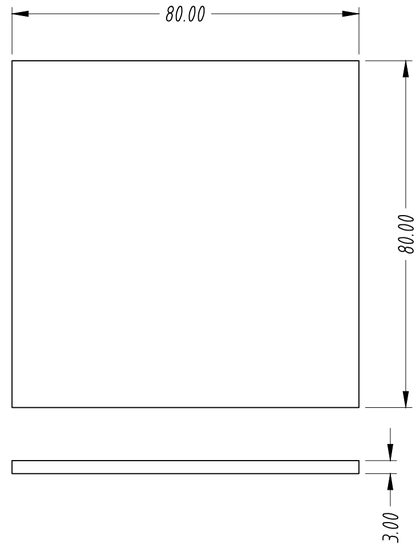

8 公分三合一保護網海綿

MEAN WELL	MATERIAL: PA707 Black		DWG NAME: 3-in-1 Fan Guard
	FINISH:		DWG. NO: BB-1
NOTE: TOL.:±1	TOL. ( ) ×. ±0.35 ×.× ±0.25 ×.×× ±0.15 ANGLES ±0.5° (✓) UP to 100:±0.2mm 100 to 200:±0.3mm 200 to 300:±0.4mm 300 to 400:±0.5mm	DATE: 2026-05-28	P/NO: PEE6FG3-8
		SCALE: 1 : 1 / UNIT: mm	
		SHEET: 1 OF 1 / REV. R0	