REV.	DESCRIPTION	ECN. CORE	DATE

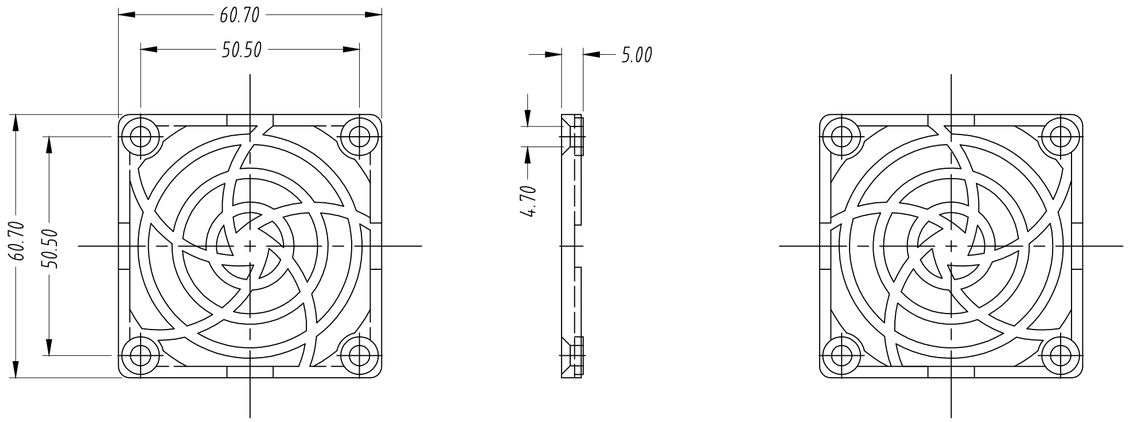

六公分三合一保護網下蓋

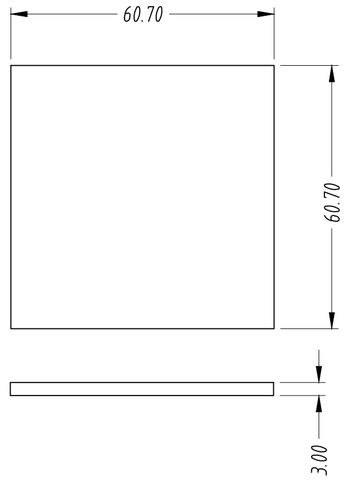

6 公分三合一保護網海綿

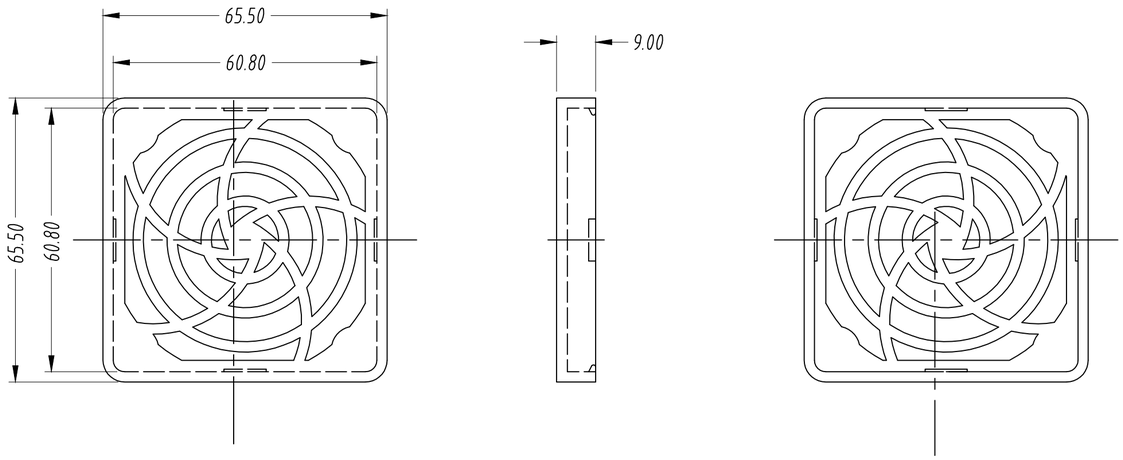

六公分三合一保護網上蓋

MEAN WELL	MATERIAL: PA707 Black		DWG NAME: 3-in-1 Fan Guard
	FINISH:		DWG. NO: BB-9
NOTE: TOL.:±1	TOL. ANGLES ±0.5° ( ) (✓) ×. ±0.35 UP to 100:±0.2mm ×.× ±0.25 100 to 200:±0.3mm ×.×× ±0.15 200 to 300:±0.4mm 300 to 400:±0.5mm	DATE: 2026-05-28	P/NO: PEE6FG3-6
		SCALE: 1 : 1 / UNIT: mm	
		SHEET: 1 OF 1 / REV. R0	