REV.	DESCRIPTION	ECN. CORE	DATE

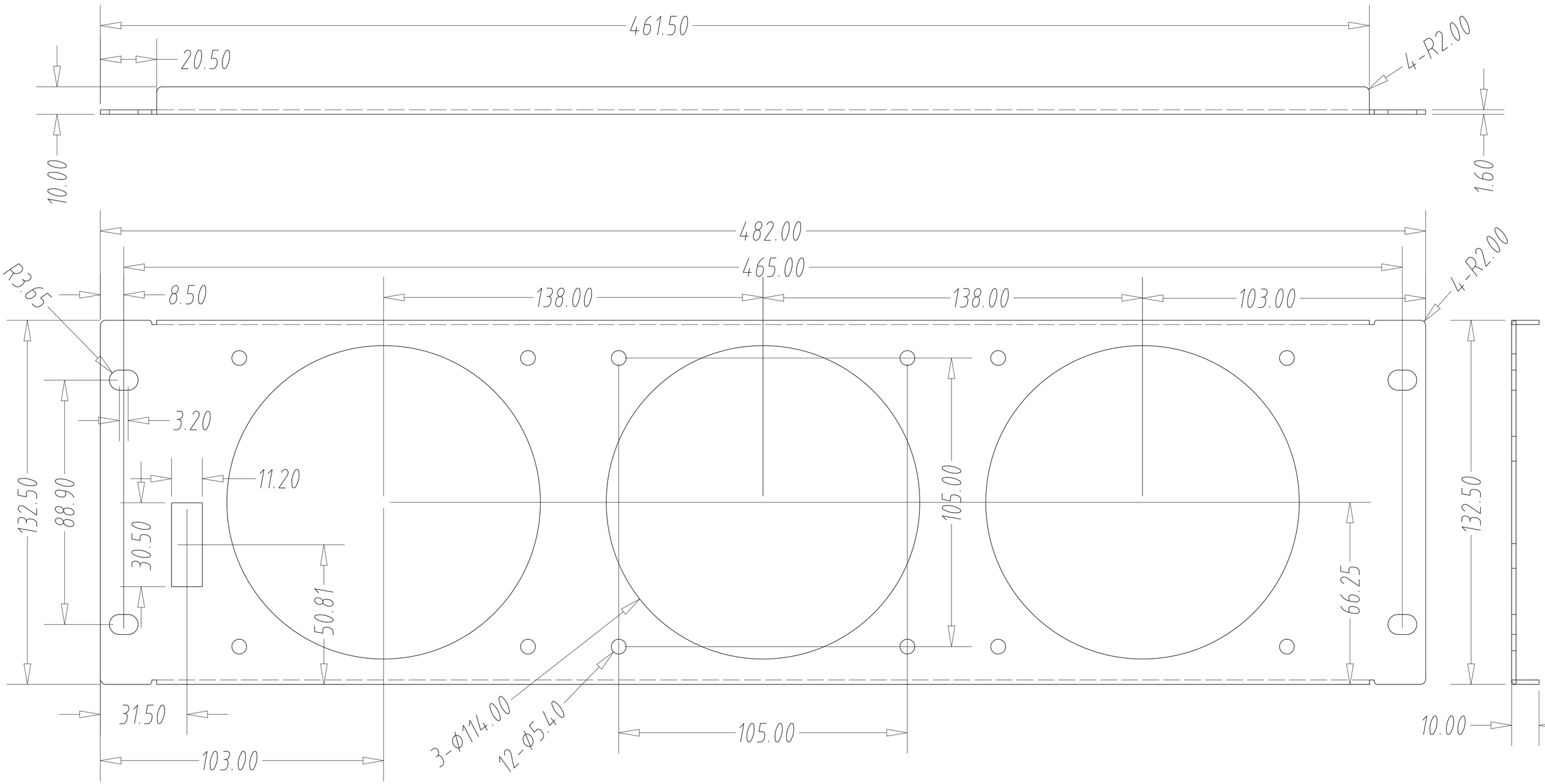

MEAN WELL

NOTE:
整合RD9BM03U

MATERIAL: SPCC T=1.6mm			DWG NAME: 3U风扇板
FINISH: 細織紋烤漆 PANTONE 4U △E<2.5			DWG. NO: 系統電源
TOL. ANGLES ±0.5° ( ) (✓) ×. ±0.35 UP to 100:±0.2mm ×.× ±0.25 100 to 200:±0.3mm ×.×× ±0.15 200 to 300:±0.4mm 300 to 400:±0.5mm	DATE: 2025-10-31		P/NO: PGG7RA9BM03U
	SCALE: 1 : 1	UNIT: mm	
	SHEET: 1 OF 1	REV. R0	