REV.	DESCRIPTION	ECN. CORE	DATE
A	2，符合1000KG荷重		20250423

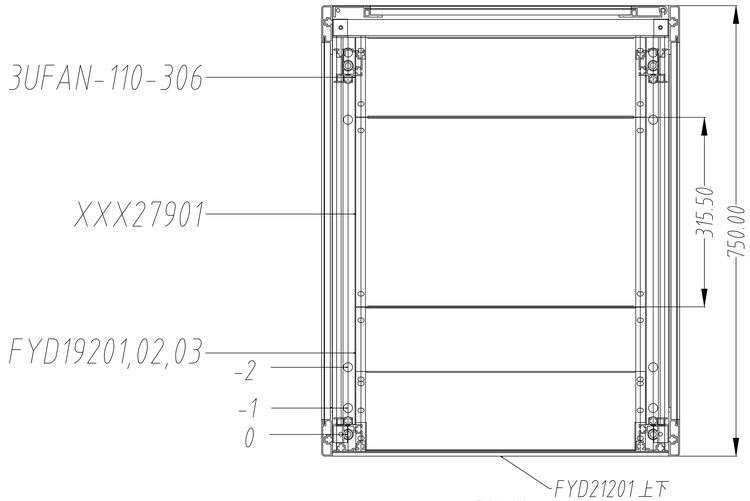

注意事項：

1.SA26-3PPUMBSH 3"煞車輪 X 2顆

SA26-3PPUMASH 3"活動輪 X 2顆

RA-FLOORSTAND-1 X 4

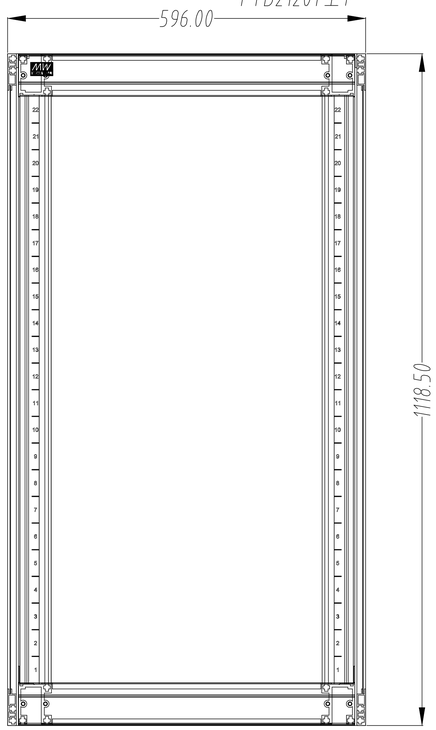

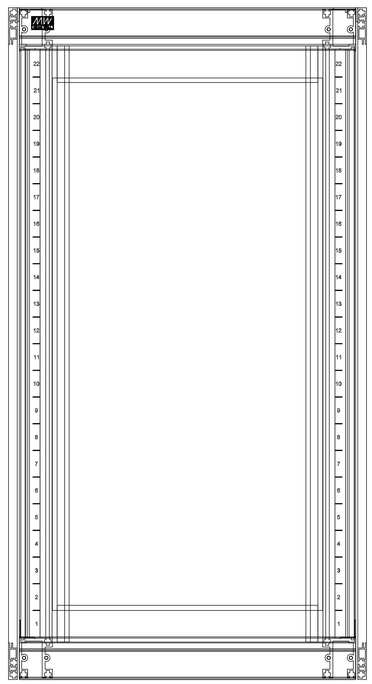

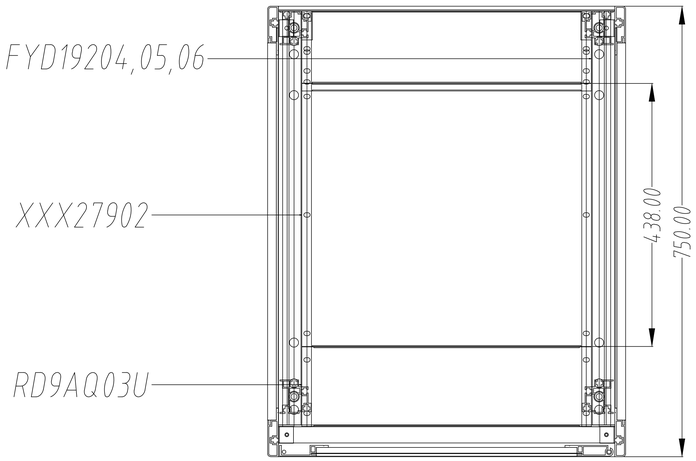

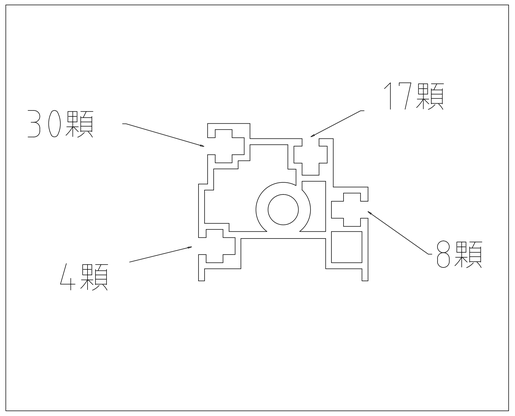

NOTE: 1，机柜配套BM5*12SUS螺丝150颗

2，符合1000KG荷重 A

MEAN WELL	MATERIAL:		DWG NAME: RA-22U-750機櫃
	FINISH: 細織紋烤漆 PANTONE 4U △E<2.5		DWG. NO: 系統電源
NOTE:	TOL. ANGLES ±0.5° ( ) (✓) ×. ±0.35 ×.× ±0.25 ×.×× ±0.15 UP to 100:±0.2mm 100 to 200:±0.3mm 200 to 300:±0.4mm 300 to 400:±0.5mm	DATE: 2025-04-23	P/NO: P××2RA-22U-750-C
		SCALE: 1 : 1 / UNIT: mm	研發部 MEAN WELL 鄭臻灣
		SHEET: 1 OF 1 / R3	